PROJECT REF:	87658-B9720 & (2) 87659-B9721
UNIT REF:	MULTI UNIT SUPPORT
FOOT PRESSURE:	N/A
UDL:	N/A

Material grade: BS EN 10219-1:2006 (S235JR). Welding standard: BS EN ISO 15614-1: 2016. Galvanizing standard: BS EN ISO 1461:2009
Reference specification document "Custom Fabrication Specification" (BF-SPEC-050411) for further information
Reference specification document "Big Foot Systems Steel Specification (BF-SPEC-230610) for further information

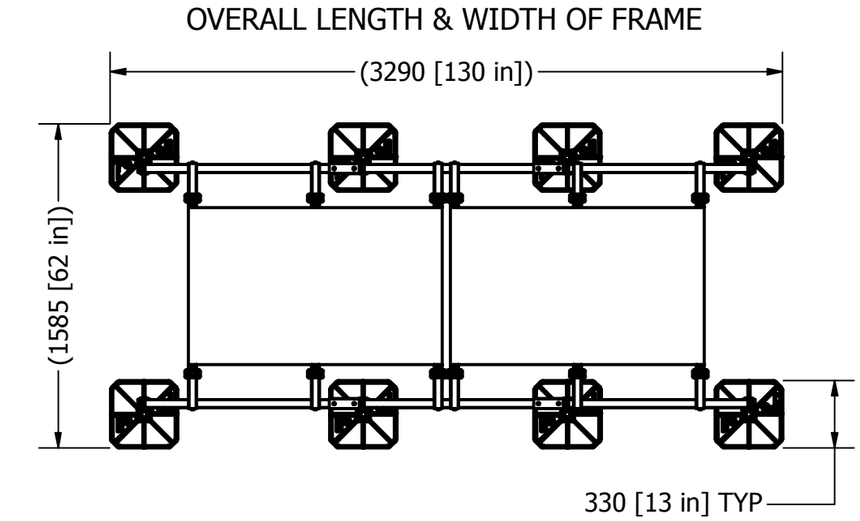

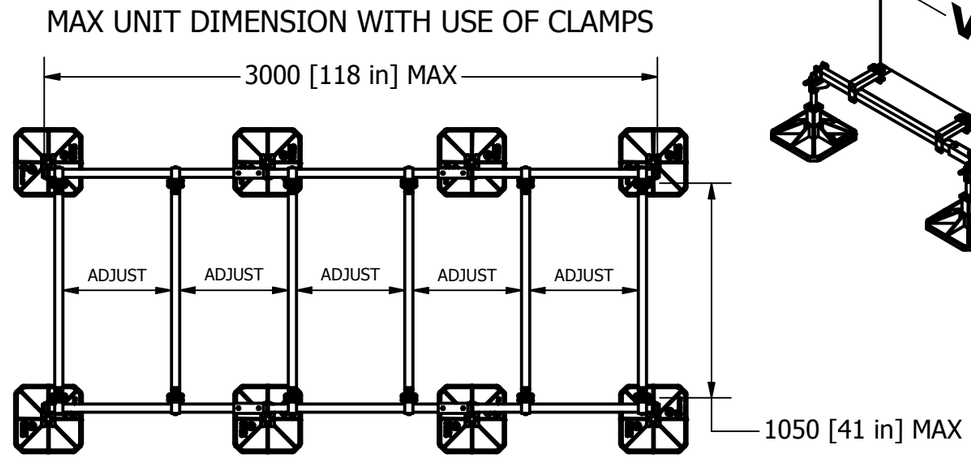

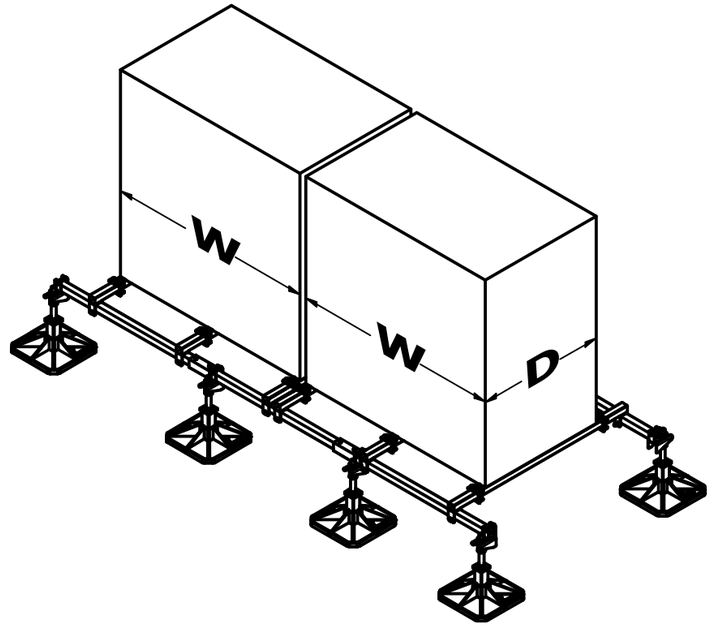

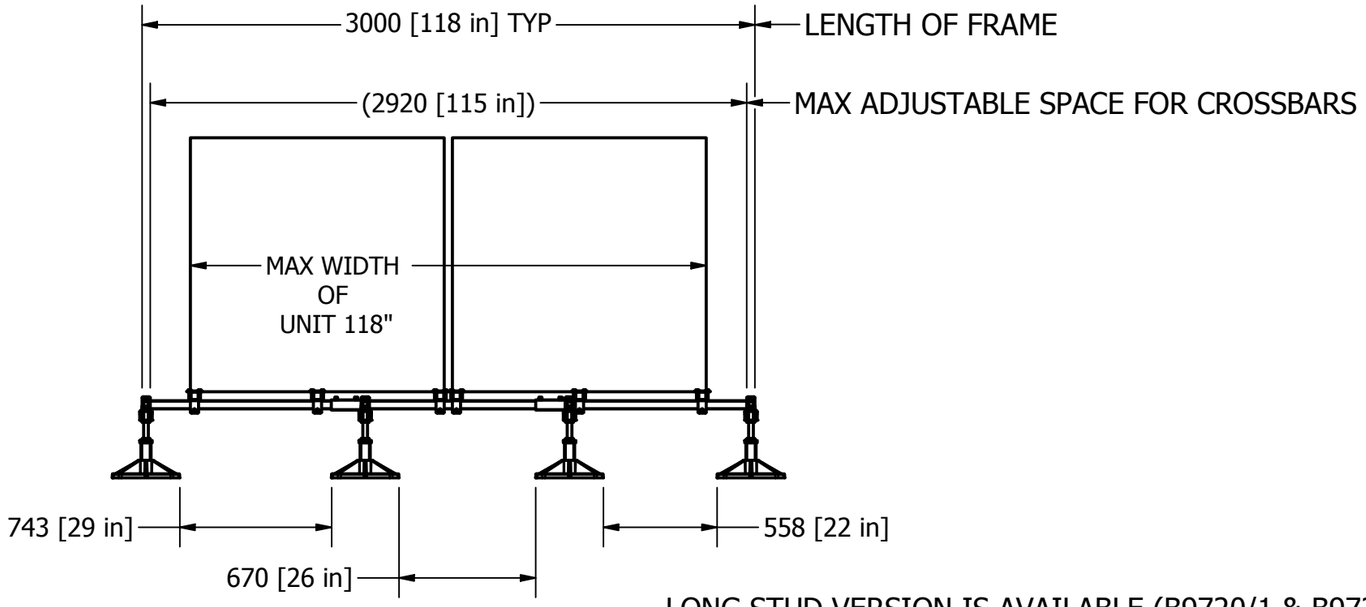

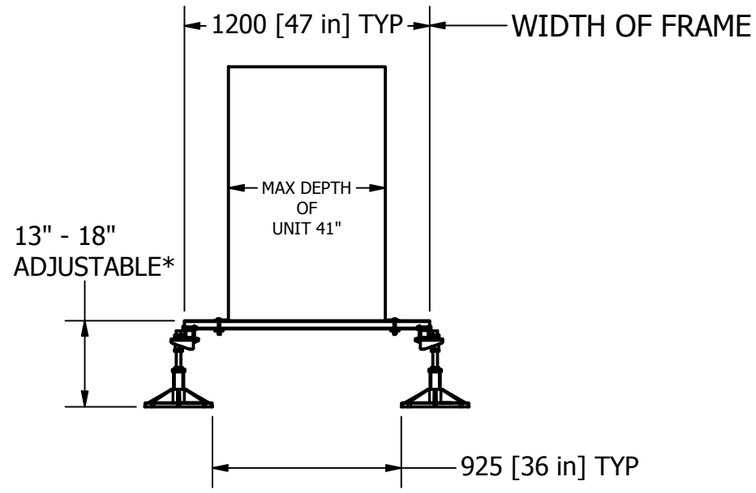

LONG STUD VERSION IS AVAILABLE (B9720/1 & B9721/1) ADJUSTABILITY 13" - 26"

NOTES:
ALL CROSSBARS ARE FULLY ADJUSTABLE ALONG THE LENGTH OF FRAME

***FROM FLOOR LEVEL TO TOP OF CROSSBAR**

REV	DATE:	6/27/2019
A	DRAWN:	K MABRY
	CHECKED:	

3rd ANGLE PROJECTION

SCALE: 1 : 30

DIMENSIONS IN mm U.O.S

TOLERANCES: 0.0 ± 0.5mm U.O.S

SHEET 1 OF 1

A3

TITLE: MULTI FRAME STD LEG

DWG No. B9720-003-2VRVMOD.dwg

BIG FOOT® SYSTEMS